CLIMA UNO

COMMERCIAL & RESIDENTIAL AIR CONDITIONING PRODUCTS

# Air Cooled Condensing Unit

## Component Features

### Condenser Coils

Air cooled condenser coils made of seamless copper tubes expanded into aluminium fins to ensure optimum heat transfer are standard supply. All standard coils are 3 or 4 rows/12 FPI, (2.1 mm) fins spacing, 3/8" (9.5 mm) O.D. tubes. An integral sub cooling circuit can be provided to increase the system capacity.

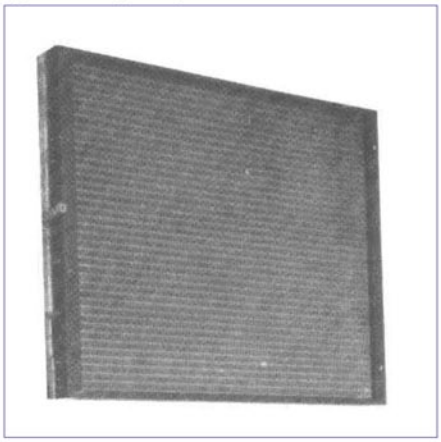

For different application requirements, other optional condenser fin materials are available :

- Pre-coated Aluminum fins
- Copper fins
- Copper fins electro-tinned after manufacture
- Copper (or aluminium fins) with Acra-Clad® coating factory applied

All condenser coils are factory tested prior to assembly to 450 psig (3100 kPa) by pressurizing the air in the coils under water.

The corrugated wavy fins design creates air turbulence which reduces air boundary film and air side thermal resistance at minimum air side pressure loss.

The headers are brazed onto the coils using 95/5 silver solder, fully minimizing possibility of leakages.

*We can make special condensers, with other than catalogued data, with different circuitings, splits, fin spacing, etc. to meet a wide range of requirements.*

### Condenser Fans/Motors

The condenser fans are propeller type direct driven by TEAO Class "F" insulated electric motors suitable for outdoor applications. Motors are 6 pole IP55 protected.

The fan blades are made of heavy gauge aluminium alloy, highly resistant to environmental corrosion and each fan is statically and dynamically balanced at the factory.

An acrylic coated heavy duty fan guard is provided for each assembly.

For applications requiring installation in a hazardous environment, the following options are available:

- Spark resistant fan blades
- Explosion proof motor

### Unit Casing

The unit casing used in ***CC*** series is made of zinc coated galvanized steel sheets conforming to JIS-G 3302 and ASTM A635 which is phosphatized and baked after an electrostatic powder coat of approximately 60 microns.

This finish and coating can pass a 1000 hour in 5% salt spray testing at 95°F (35°C) and 95% relative humidity as per ASTM B117-95.

Access panels are provided for ensuring ease of inspection and maintenance.

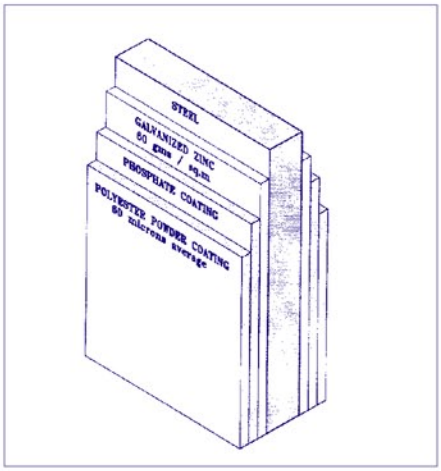


### Refrigerants

All ***CC*** series condensers are suitable and applicable to work using refrigerant R-22. For other refrigerants please consult ClimaUno.

## Options

### Control Panel

All ***CC*** units come standard with a terminal box to which leads must be connected for user supplied & installed contactors/starters and/or controls as necessary to operate the motors.

All units can be supplied with unit mounted control panel, IP55 enclosure containing contactor and overload for each motor.

When ordering please specify option ICP for IP55 enclosure. Contactors and overloads for each motor come factory wired with this option.

For hazardous duty, all internal wiring, conduiting and panel is offered with explosion proof components to suit application requirements.

### Sub Cooling Coil

All models can be provided with an independent, unpiped sub cooling coil circuit located at the bottom of each condenser coil. Sub cooling coils can be sized for providing 5°F (2.8°C) to 20°F (11.1°C) of sub cooling. Specify at order write up.

For factory piped sub-cooling circuit or piping, state on order write up.

### Interior Partitions

Desirable in multi circuited condensers with multiple fans when used in applications having wide variance of load or where required for better head pressure control.

### Condenser Coil Guards

Coil wire mesh guard, in painted or galvanized finish. Recommended wherever installation is at ground level or where access by possible vandals is feared.

### Alternative Fin Materials

All ***CC*** models can be supplied in alternative fin material like copper and additional factory applied protective coating like ACRA-CLAD®. Specify at order write up.

### Alternative FPI / Circuiting /Rows

Alternative fin spacing and/or different circuits and/or rows depth is possible providing a very wide range of thermal heat rejection capacity as well as usage for most kinds of heat rejection applications. Consult with details of your requirements.

### Low Ambient Operation

Fan cycling is available for low ambient operations down to 50°F (10°C). For temperatures down to 25°F (-4°C), head pressure control system can be provided.

### Liquid Receiver

To maintain head pressure at low ambient conditions it is necessary to use a liquid receiver to hold excess refrigerant charge (head pressure control).

## Selection Procedure

**CC** *series air cooled condensers are designed for use in standard commercial and industrial refrigeration and air conditioning systems.* **CC** *condensers are used to reject heat from the refrigerant to the ambient air environment by first desuperheating the refrigerant and then condensing the same from a vapor to liquid form.*

**CC** *condensers should be selected for the total heat rejection which is the net refrigeration capacity at the evaporator plus the heat of compression added to the refrigerant gas by the compressor.*

*On a Pressure-Enthalpy diagram of a refrigerant this can be easily shown as below.*

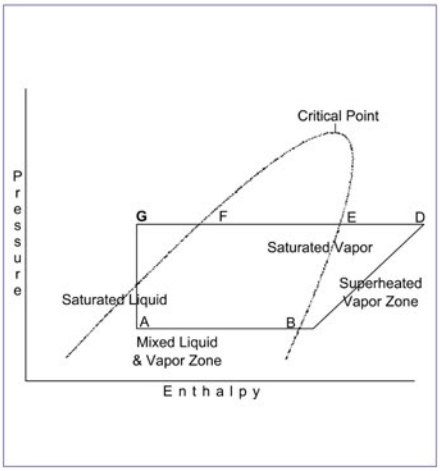


*The* **CC** *condenser should be sized for removing the enthalpy indicated from point D to point G which includes the desuperheating at entry to* **CC** *condenser (Pts D to E), constant pressure/temperature condensing in* **CC** *(Pts E to F) and sub cooling of the liquid refrigerant (Pts F to G).*

*If the evaporator load or heat input is known as desired, the* ***CC*** *capacity; i.e. total heat rejection (THR) in MBH can be calculated as follows;*

1. *For open drive compressors THR = Compressor Capacity (in MBH) + (motor BHP x 2.545)*

2. *For semi-hermetic, or hermetic compressors, suction gas cooled THR = Compressor capacity (in MBH) + (Input kw x 3.413)*

*For single stage systems, in many cases the compressor input power is not known. In such cases the particular compressor manufacturers performance curves for the particular compressor should be used to directly obtain the cooling capacity and the corresponding THR can be determined from those curves.*

| STANDARD EQUIPMENT | OPTIONAL EQUIPMENT |
|---|---|
| **PC12Z to PC30Z**<br>* Scroll compressor<br>* Internal compressor motor protection<br>* PSC motor with thermally protection<br>* Magnetic contactor<br>* High pressure protection<br>* Low pressure protection<br>* Time delay relay<br>* 220V. Control circuit<br>* Holding charged with R-22 | **PC12Z to PC30Z**<br>* 24V. Control circuit<br>* Phase protector<br>* Overload protector<br>* Crankcase heater<br>* Copper fins<br>* Suction valve<br>* Liquid valve<br>* Discharge valve<br>* Filter drier<br>* Other Gasses |
| **PC40Z to PC60Z**<br>* LCS Scroll compressor<br>* Solid state compressor motor protection<br>* PSC motor with thermally protection<br>* Magnetic contactor<br>* High pressure protection<br>* Low pressure protection<br>* Time delay relay<br>* Crankcase heater<br>* 24V. Control circuit<br>* Holding charged with R-22 | **PC40Z to PC60Z**<br>* Phase protector<br>* Overload protector<br>* Copper fins<br>* Suction valve<br>* Liquid valve<br>* Discharge valve<br>* Filter drier<br>* Other Gasses |
| **PC70-01 to PC80-01**<br>* Semi Hermetic compressor<br>* Solid state compressor motor protection<br>* PSC motor with thermally protection<br>* Magnetic contactor<br>* High pressure protection<br>* Low pressure protection<br>* Time delay relay<br>* Crankcase heater<br>* 24V. Control circuit<br>* Holding charged with R-22 | **PC70-01 to PC80-01**<br>* Phase protector<br>* Overload protector<br>* Copper fins<br>* Suction valve<br>* Liquid valve<br>* Discharge valve<br>* Filter drier<br>* Other Gasses |

CLIMA UNO

## SPECIFICATIONS

| UNIT MODEL | | | CC12Z | CC15Z | CC20Z | CC25Z | CC30Z | CC40Z | CC50Z | CC60Z | CC70-01 | CC80-01 |
|---|---|---|---|---|---|---|---|---|---|---|---|---|
| NOMINAL COOLING CAPACITY | | MBH | 122.8 | 154.9 | 199.3 | 257.6 | 308.1 | 422.1 | 533.3 | 638.7 | 671.5 | 680.0 |
| AT 95°F AMBT/45°F SST | | KW | 36.0 | 45.4 | 58.4 | 75.5 | 90.3 | 123.7 | 156.3 | 187.2 | 196.8 | 199.3 |
| POWER SOURCE | | V/PH/Hz | 380-420/3/50 | | | | | | | | | |
| CONNECTIONS | | | | | | | | | | | | |
| | SUCTION-ODF | INCH | 1-3/8 | 1-5/8 | 1-3/8 x 2 | | 1-5/8 x 2 | 1-5/8 x 2 | | | 2-1/8 x 2 | |
| | LIQUID-ODF | INCH | 5/8 | 3/4 | 5/8 x 2 | | 3/4 x 2 | 7/8 x 2 | | | 7/8 x 2 | |
| UNIT DIMENSION (mm.) | | | | | | | | | | | | |
| | A | DEPTH | 950 | 1,130 | | | 1,130 | 2,040 | 2,040 | | 2,040 | |
| | B | WIDTH | 1,300 | 2,440 | | | 3,302 | 2,600 | 3,187 | | 3,945 | |
| | C | HEIGHT | 985 | 888 | | | 888 | 1,525 | 1,520 | | 1,525 | |
| UNIT OPERATING WEIGHT | | KGS | 233 | 273 | 418 | 440 | 540 | 870 | 910 | 950 | 1374 | 1469 |
| COMPRESSORS | | | | | | | | | | | | |
| | TYPE | | SCROLL | | | | | | | | SEMI HERMETIC | |
| | POWER SOURCE | V/PH/Hz | 380-420/3/50 | | | | | | | | | |
| | QUANTITY | | 1 | 1 | 2 | 2 | 2 | 2 | 2 | 2 | 2 | 2 |
| | MOTOR HP | | 12.0 | 15.0 | 10.0 | 12.0 | 15.0 | 20.0 | 25.0 | 30.0 | 35.0 | 40.0 |
| | RATED LOAD AMPS E | Amp. | 22.9 | 24.2 | 20.7 | 22.9 | 24.2 | 33.6 | 41.4 | 54.3 | 62.7 | 64.3 |
| | LOCKED ROTOR AMP | Amp. | 145.0 | 175.0 | 130.0 | 145.0 | 175.0 | 225.0 | 272.0 | 310.0 | 225.0 | 239.0 |
| CONDENSER COIL | | | | | | | | | | | | |
| | TYPE | | PLATE FIN (SLIT TYPE) BONDED WITH PLAIN OR INNER GROOVE COPPER TUBES | | | | | | | | | |
| | NUMBER OF CIRCUIT | | 1 | 1 | 2 | 2 | 2 | 2 | 2 | 2 | 2 | 2 |
| | FACE AREA | $FT^2$ | 15.6* | 23.3* | 23.3 | 23.3* | 35.5* | 50.0 | 66.0 | 66.0 | 100.0 | 100.0* |
| | NO. OF ROWS | | 3 | 2 | 3 | 3 | 3 | 4 | 3 | 4 | 3 | 3 |
| | NO. OF FIN PER INCH | | 12 | 12 | 14 | 14 | 14 | 12 | 12 | 14 | 12 | 14 |
| CONDENSER FAN | | | | | | | | | | | | |
| | TYPE | | PROPELLER | | | | | | | | | |
| | QUANTITY | | 1 | 2 | 2 | 2 | 3 | 4 | 6 | 6 | 8 | 8 |
| | DIAMETER | INCH | 28 | 26 | 26 | 26 | 26 | 28 | 26 | 26 | 28 | 28 |
| CONDENSER FAN MOTOR | | | | | | | | | | | | |
| | TYPE | | PERMANENT SPLIT CAPACITOR | | | | | | | | | |
| | POWER SOURCE | V/PH/Hz | 220/1/50 | | | | | | | | | |
| | QUANTITY | | 1 | 2 | 2 | 2 | 3 | 4 | 6 | 6 | 8 | 8 |
| | POWER OUTPUT | HP. | 3/4 | 1/2 | 1/2 | 3/4 | 3/4 | 3/4 | 3/4 | 3/4 | 3/4 | 3/4 |
| | RPM | | 940 | 900 | 900 | 940 | 940 | 940 | 940 | 940 | 940 | 940 |
| | FULL LOAD AMPS EA( | Amp. | 4.0 | 3.5 | 3.5 | 4.0 | 4.0 | 4.0 | 4.0 | 4.0 | 4.0 | 4.0 |
| TYPE OF REFRIGERANT | | | R-22 | | | | | | | | | |
| STANDARD COMPONENTS | | | | | | | | | | | | |
| | ACCESSORIES | | MAGNETIC CONTACTOR | | | | | | | | | |
| | SAFETY DEVICES | | INTERNAL COMPRESSOR AND FAN MOTOR PROTECTION | | | | | | | | | |

NOTE :- * INNER GROOVE COPPER TUBES

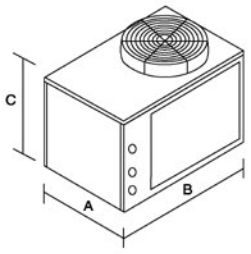


PC 12Z

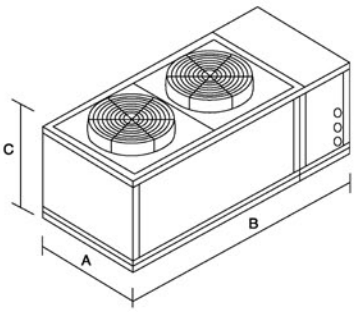


PC 15Z - PC 25Z, PC 20Z1 - PC 25Z1

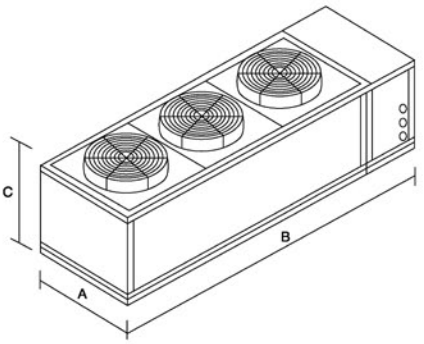


PC 30Z, PC 30Z1

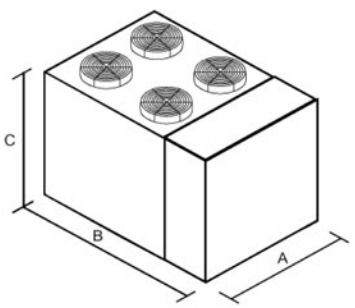


PC 40Z

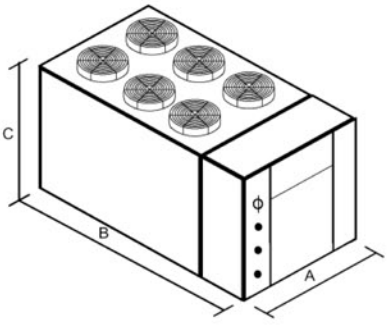


PC 50Z - PC 60Z

## PERFORMANCE DATA

| UNIT MODEL | SATURATED SUCTION TEMP °F | AIR TEMPERATURE ENTERING CONDENSER °F | | | | | | | |
|---|---|---|---|---|---|---|---|---|---|
| | | 96 | | 105 | | 115 | | 125 | |
| | | MBH | KW | MBH | KW | MBH | KW | MBH | KW |
| CC 12Z | 35 | 108.2 | 8.7 | 102.4 | 9.7 | 96.6 | 10.8 | 90.4 | 12.1 |
| | 40 | 118.4 | 8.9 | 112.3 | 9.9 | 105.8 | 11.1 | 99.3 | 12.3 |
| | 45 | 129.7 | 9.1 | 122.8 | 10.1 | 115.7 | 11.4 | 108.5 | 12.6 |
| | 50 | 141.6 | 9.4 | 134.1 | 10.5 | 126.6 | 11.6 | 118.7 | 12.8 |
| CC 15Z | 35 | 136.8 | 11.5 | 127.6 | 12.8 | 121.1 | 14.2 | 112.9 | 15.6 |
| | 40 | 150.5 | 11.8 | 141.6 | 13.1 | 133.1 | 14.6 | 123.9 | 16.0 |
| | 45 | 164.5 | 12.1 | 154.9 | 13.5 | 145.4 | 14.9 | 135.8 | 16.4 |
| | 50 | 179.1 | 12.5 | 168.9 | 14.0 | 158.7 | 15.4 | 148.4 | 16.8 |
| CC 20Z | 35 | 177.1 | 15.7 | 166.5 | 17.6 | 155.9 | 19.6 | 144.7 | 21.7 |
| | 40 | 194.1 | 16.0 | 182.5 | 17.9 | 171.3 | 19.9 | 159.3 | 21.9 |
| | 45 | 211.9 | 16.5 | 199.3 | 18.4 | 187.0 | 20.3 | 174.7 | 22.3 |
| | 50 | 230.3 | 16.9 | 217.0 | 19.0 | 203.7 | 21.0 | 190.4 | 23.0 |
| CC 25Z | 35 | 228.6 | 19.6 | 215.3 | 21.6 | 201.6 | 23.8 | 187.7 | 26.0 |
| | 40 | 250.4 | 20.3 | 235.8 | 22.3 | 221.1 | 24.5 | 206.4 | 26.7 |
| | 45 | 273.6 | 21.1 | 257.6 | 23.2 | 241.9 | 25.4 | 225.9 | 27.5 |
| | 50 | 298.2 | 22.1 | 280.8 | 24.3 | 263.7 | 26.3 | 246.3 | 28.5 |
| CC 30Z | 35 | 271.9 | 22.3 | 257.3 | 24.6 | 241.2 | 27.5 | 225.2 | 30.4 |
| | 40 | 298.2 | 22.9 | 282.2 | 25.3 | 264.8 | 28.2 | 247.4 | 31.1 |
| | 45 | 325.5 | 23.4 | 308.1 | 25.9 | 289.7 | 28.8 | 270.9 | 31.8 |
| | 50 | 355.2 | 24.1 | 335.7 | 26.8 | 316.0 | 29.6 | 295.8 | 32.5 |
| CC 40Z | 35 | 372.2 | 29.1 | 352.1 | 32.0 | 331.0 | 35.6 | 309.1 | 39.3 |
| | 40 | 408.4 | 30.0 | 386.2 | 33.0 | 363.0 | 36.6 | 339.5 | 40.3 |
| | 45 | 446.3 | 30.9 | 422.1 | 34.0 | 397.2 | 37.5 | 371.6 | 41.3 |
| | 50 | 486.9 | 32.1 | 463.0 | 35.0 | 433.7 | 38.6 | 406.0 | 42.4 |
| CC 50Z | 35 | 469.8 | 37.8 | 443.6 | 41.4 | 415.9 | 45.9 | 387.6 | 50.4 |
| | 40 | 515.9 | 39.3 | 486.2 | 43.1 | 456.9 | 47.5 | 426.2 | 51.9 |
| | 45 | 565.0 | 40.7 | 533.3 | 44.6 | 500.9 | 48.9 | 467.8 | 53.2 |
| | 50 | 617.9 | 42.4 | 582.4 | 46.5 | 547.6 | 50.7 | 512.1 | 54.9 |
| CC 60Z | 35 | 565.4 | 44.9 | 535.0 | 49.2 | 502.9 | 54.6 | 470.5 | 60.2 |
| | 40 | 618.6 | 49.4 | 585.5 | 50.8 | 550.7 | 56.2 | 515.6 | 61.6 |
| | 45 | 674.6 | 47.7 | 638.7 | 52.3 | 601.5 | 57.5 | 564.0 | 62.9 |
| | 50 | 734.9 | 49.4 | 695.7 | 54.1 | 655.8 | 59.3 | 615.5 | 64.7 |
| CC 70-01 | 35 | 592.3 | 50.8 | 553.1 | 54.1 | 515.6 | 57.1 | 477.7 | 59.9 |
| | 40 | 651.7 | 53.3 | 606.7 | 65.8 | 565.7 | 60.0 | 524.8 | 63.0 |
| | 45 | 712.1 | 55.9 | 671.5 | 59.6 | 617.6 | 62.9 | 573.6 | 66.3 |
| | 50 | 775.9 | 58.2 | 720.3 | 62.1 | 672.2 | 65.9 | 624.7 | 69.6 |
| CC 80-01 | 35 | 600.5 | 57.7 | 557.9 | 60.9 | 515.9 | 64.0 | 472.9 | 67.3 |
| | 40 | 662.3 | 60.8 | 615.9 | 64.0 | 570.5 | 67.3 | 524.4 | 71.2 |
| | 45 | 730.9 | 63.7 | 680.0 | 67.0 | 630.2 | 70.7 | 580.0 | 74.8 |
| | 50 | 809.0 | 66.5 | 752.0 | 70.2 | 696.0 | 73.9 | 639.8 | 77.7 |

DUE TO CONTINUOUS PRODUCTS IMPROVEMENT MANUFACTURER RESERVES THE RIGHT TO MAKE CHANGES IN DESIGN AND CONSTRUCTION AT ANY TIME WITHOUT NOTICE AND WITHOUT INCURRING OBLIGATIONS.

## GUIDE SPECIFICATIONS

### GENERAL

The contractor shall supply and install factory assembled air-cooled remote condensers, the number and capacity of which shall be as indicated in the capacity schedule shown on the drawings. Each machine shall consist of condenser coils, fans, fan motors, electrical junction box and interconnecting refrigerant piping. The machine shall be factory assembled and internally wired. Each machine shall be capable of operating satisfactorily in a wide range of ambient air temperatures ranging from 50°F (10°C) to 125°F (52 °C ).

### CASING

Machine casing shall be made of heavy gauge zinc coated galvanized steel sheets conforming to JIS-G 3302 and ASTM-A 635. To provide an extremely tough , scratch resistance , excellent anti-corrosive protection, fabricated steel shall be thoroughly de-greased and then phosphatized before application of an average 60 micron backed electrostatic polyester dry powder coating in RAL 7032 color scheme. This finish shall pass 1000-hour, 5% salt spray test at 95 F (35 °C) and 95% relative humidity (ASTM B 117/95).

Machine casing shall be provided with access doors for easy service and maintenance of all its parts.The machine shall be fully assembled on heavy gauge zinc coated galvanized steel frame.

### CONDENSER COILS

Condenser coil shall be air cooled and shall be constructed of seamless copper tubes, maximum 4 rows deep, 3/8" (9.52 mm) O.D. and mechanically bonded to the wavy type aluminum fins . Fins spacing shall be maximum 12 FPI (2.1mm). Pre-coated Aluminum fins shall be used for saline and corrosive environment. Integral sub cooling circuit in each coil shall be provided to increase system capacity. Each coil shall be tested against leakage by air pressure of 450 psig (3100 Kpa) under water.

### CONDENSER FANS / MOTORS

The machine shall be furnished with direct driven propeller type discharging air upward condenser fans. Fans shall be constructed of corrosion resistant blades such as heavy gauge aluminum. The fan and drive shall be held in proper alignment. Fan assemblies shall be provided with heavy gauge, rust resistant steel. The fan assembly shall be protected with an acrylic coated steel wire fan guard. All condenser fans shall be individually statically and dynamically balanced for vibration free operation.

Condenser fan motor shall be Totally Enclosed Air Over (TEAO), 3-phase type, 6 poles with Class F insulation , Class B temperature rise and IP55 protection. Also, Motor shall be with permanently lubricated bearings and inherent corrosion resistance shaft. Junction box shall be provided with motor terminals brought out.

### REFRIGERANT PIPING

Refrigerant circuit piping shall be fabricated from ACR grade copper pipes. The piping connections shall be terminated with sealed & soldered copper pipe ends, which give much protection to condenser coils, simplicity & ease to the installation.

## TYPICAL PIPING AND WIRING

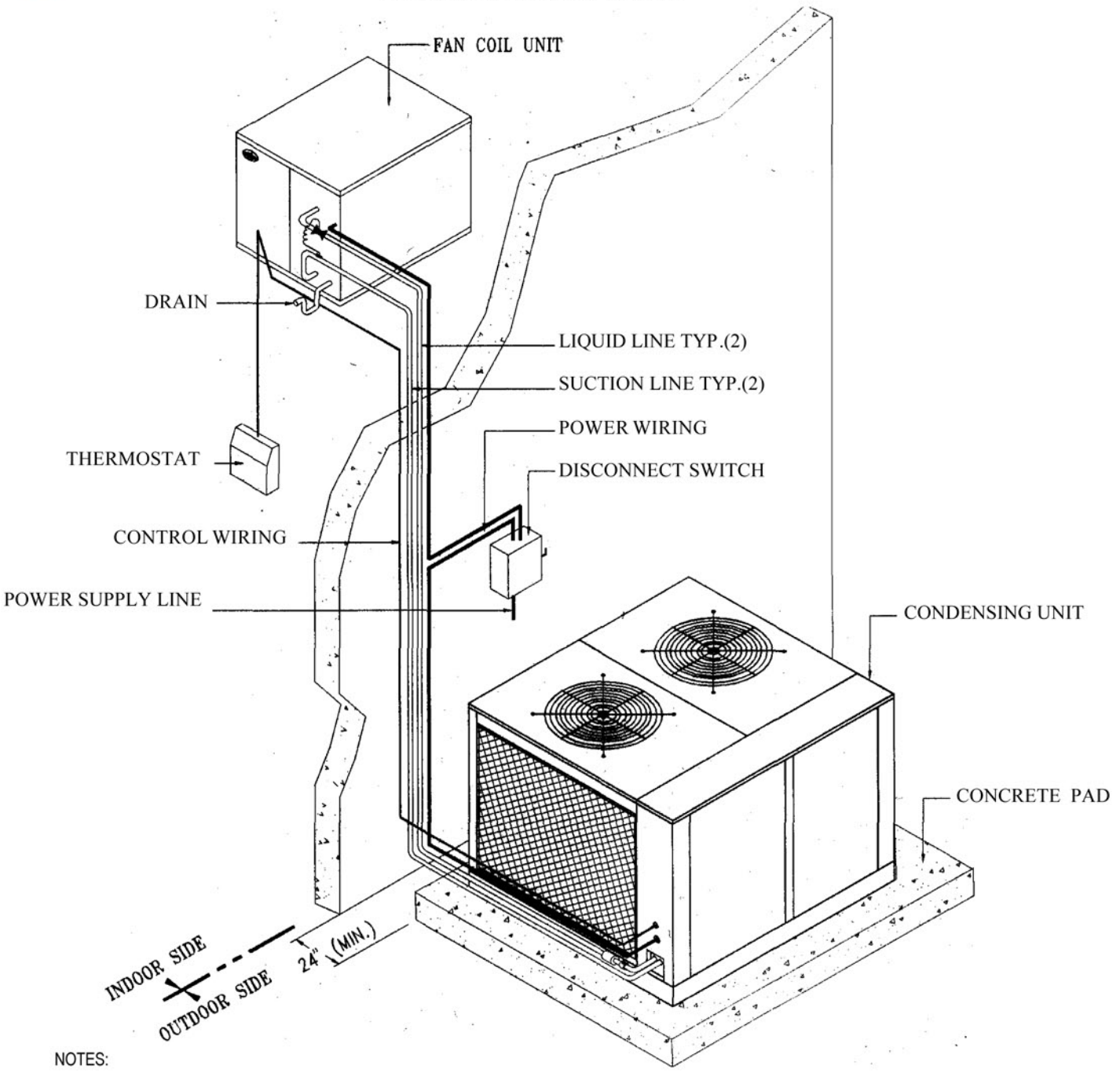


NOTES:

1. Unit placement depend on space requirement for service and airflow.
2. Illustration shown is a general guide only and is not intended for or include all details for any specific installation.

3. Control relay which starts and stops condensing unit must be powered externally. Typical system control wiring shown uses indoor section 50 VA control circuit (24 V) transformer as power source.

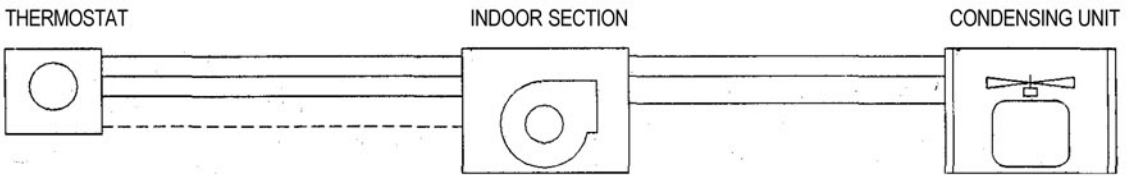


——— Wiring necessary for cooling without heating.

– – – – – – Add to cooling wiring for cooling with one stage heating. (2 Add wire for two stage heating)

CLIMA UNO
Via Pier Luigi Nervi, 188/G/25 - 04100 Latina (Italy)
Phone: +39 0773 629191 - Fax: +39 0773 603388
Email: info@climauno.com - www.climauno.com

Design by Motive - T : 0933 42 77 07